# *Power Divider / Combiner*

**Model: MPD4-005080**

**Microot Microwave co., Ltd.**

## *4-Way Power Divider*

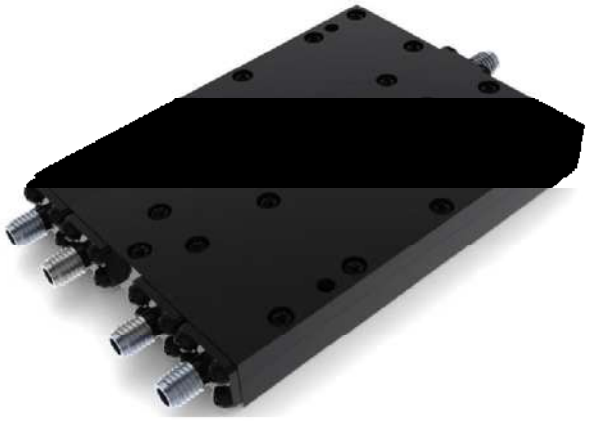

## Elec. Spec. "50Ω"

Inquiry

| | |
|---|---|
| Freq. Range (GHz) | 0.5-8 |
| Input VSWR Max | 1.5 |
| Output VSWR Max | 1.5 |
| Insertion Loss (dB) Max | 2 |
| Amp. Bal. (dB) Max | ±0.4 |
| Pha. Bal. (deg) Max | ±4 |
| Isolation (dB) Min | 16 |
| CW Power (W) Max | 20 |
| Peak Power (KW) Max | 3 |
| Connector | SMA-Female |
| Operating Temp. (°C) | -35~+105 |
| Storage Temp. (°C) | -55~+125 |

## Features

1.Theortical Insertion Loss not included in the Insertion Loss Parameter.

2. Multi-Octave bandwith of working frequency range.

3. Superior phase balance and amplitude balance between any 2 ports.

4. Low VSWR and high Output Isoliation.

## Outline Drawing Unit: mm

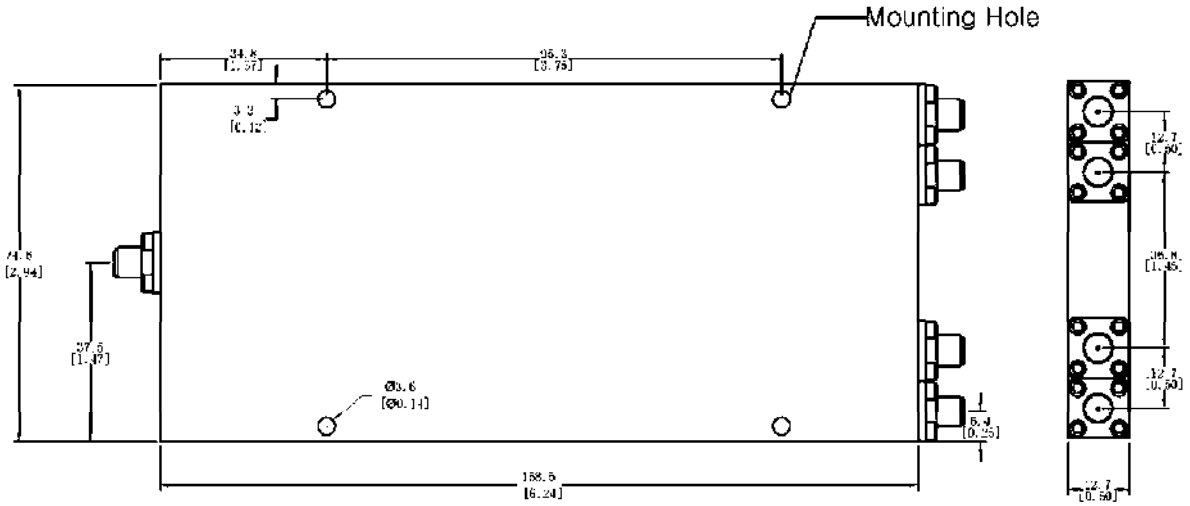


Add: #D505,Dahecang, No.511,Xingshi Rd,Western Section 1,3rd Ringroad, Chengdu,CHINA
Tel: 86-28-85542308, Fax: 86-28-85007280, E-mail: info@mic-root.com,Website: www.mic-root.com